ANTI TWO BLOCK & SHUTOFF CIRCUIT*

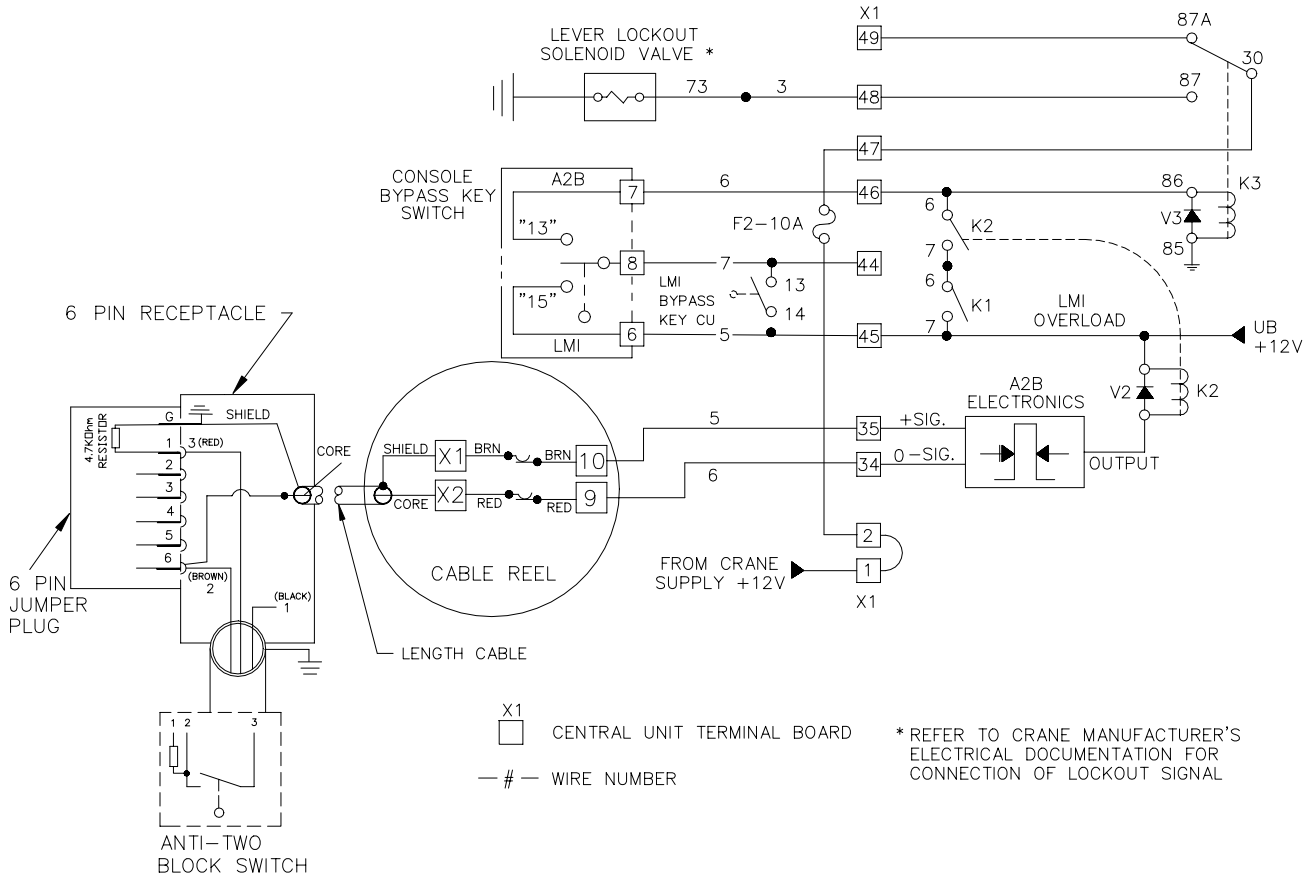

LENGTH MEASURING CHANNEL 1*

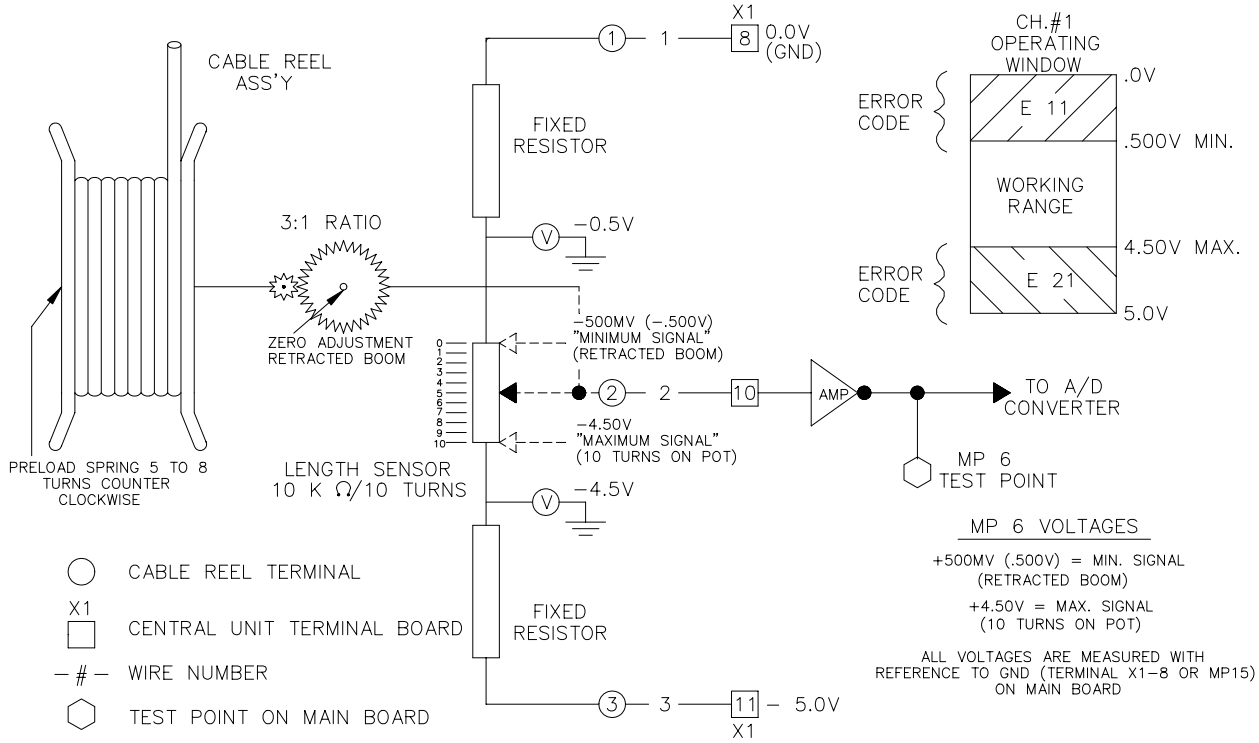

** Diagrams from PAT DS350G/GW Service Manual P/N 031-300-190-046, Rev. B, 04/18/01. Consult your crane manual for specific information.*